SmartFan® Storm

DC Power Regulator Board

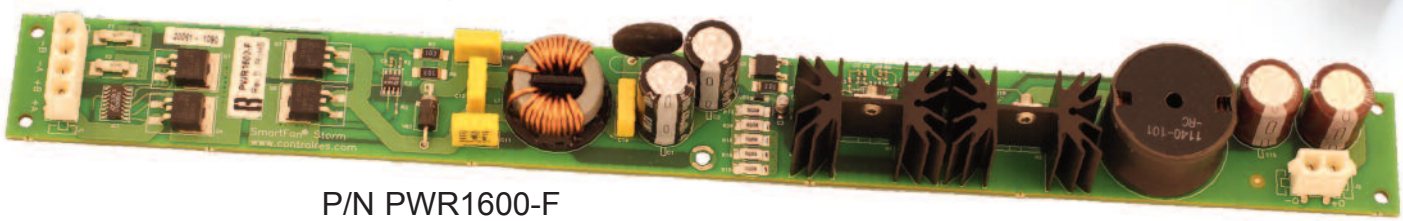

P/N PWR1600-F

SmartFan Storm is a DC power regulator board designed to provide a regulated voltage source for 12 or 24 VDC fans and motors. Storm accepts single or dual power feeds in the range from 20 to 76 VDC. Dual power feeds are diode OR'd. The output voltage is regulated using a current mode buck control circuit. The board operates at a high frequency to achieve maximum power efficiency at minimum size. Storm can be used as a stand alone regulated voltage source or can be combined with other standard SmartFan products including the TachScan and TachStrip product lines of fan speed alarms and the Cirrus product line of 4-wire fan speed control and alarm boards.

SPECIFICATIONS

- Power Source: 20 to 76 VDC, single or dual power feeds
- Current Rating: 16 Amps @ 75°C or less
- Output Voltage: 12 or 24 VDC (+/-10%), jumper selectable
- Operating Temperature: -20°C to 75°C
- Storage Temperature: -40°C to 125°C
- Relative Humidity: 95% non-condensing
- Weight: 10.50 oz. (296 grams)
- RoHS (6/6) Compliant

Part Number	Header Type	Assembly Height
PWR1600-F	AMP MATE-N-LOK	1.72" (43.7mm)
PWR1601-F	.250" Quick-Fit Spade	1.41" (35.8mm)
H126-F	Hardware Pack	

FEATURES

- Active ORing for dual power feeds
- Hot-swap passive inrush controller
- Input Power Fuses: 25 Amps per input
- EMI chokes to minimize conducted noise
- Output filter to minimize switching noise emissions
- High power efficiency, typically greater than 90%
- Voltage adjustment is accomplished with a current mode buck control circuit.
- Compatible with standard SmartFan Fan Alarms:
  - SmartFan TachStrip: Monitors up to 6 fans
  - SmartFan TachScan-3: Monitors up to 3 fans
  - SmartFan TachScan-9: Monitors up to 9 fans
- Compatible with standard SmartFan 4-wire Fan Speed Controls and Alarms:
  - SmartFan Cirrus-2: Controls 1 or 2 DC fans
  - SmartFan Cirrus-6: Controls up to 6 DC fans
  - SmartFan Cirrus-9: Controls up to 9 DC fans
- Agency approvals pending

SmartFan® *Storm*

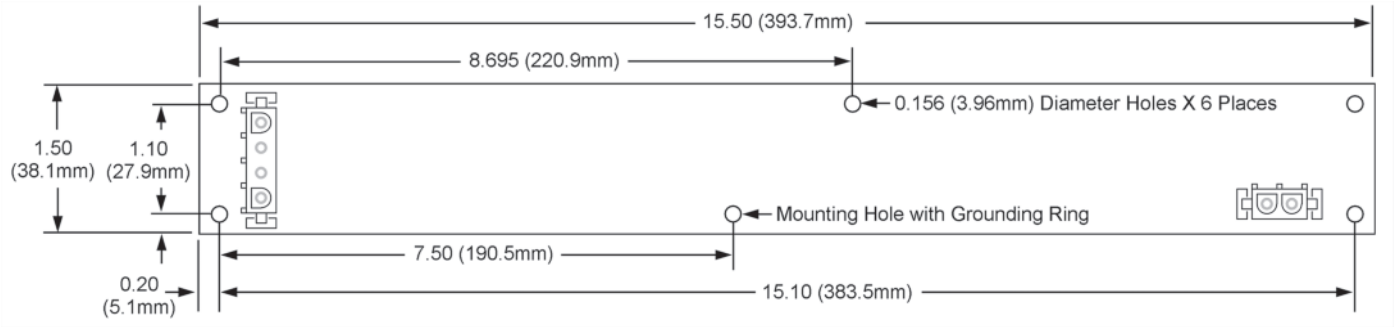

Dimensional Drawing

Additional height for mating housing
TE/Amp P/N 350779-4 and wire allowance
when using Storm P/N PWR1600-F

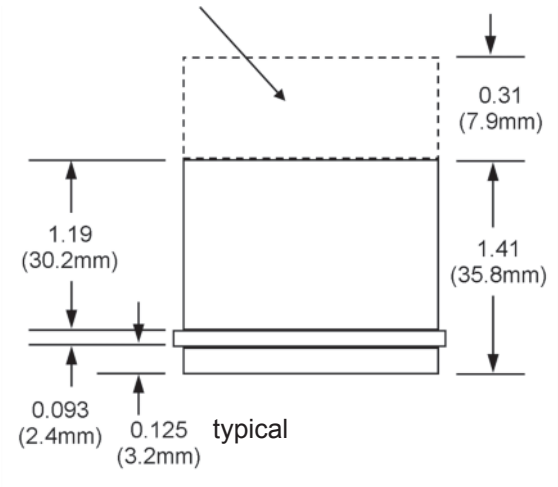

Assembly Height

INSTALLATION & OPERATION

Mounting: Using the PCB support hardware in hardware pack H126-F, or equivalent, mount the Storm on a flat surface using all six mounting holes for maximum support. To minimize EMI, securely mount the unit on a grounded surface using a metal spacer and hardware at the mounting hole that is surrounded by a grounding ring.

Connector Pin Assignments: A description of the function of each connector pin and location is listed in Table 1.0.

Table 1.0: Connector Pin Assignments

Header	Label	Description
J1	+A	Power Supply A, Positive Terminal
	+B	Power Supply B, Positive Terminal
	-A	Power Supply A, Negative Terminal
	-B	Power Supply B, Negative Terminal
J2	0+	Output, Positive Terminal
	0-	Output, Negative Terminal

Connecting Hardware: Use CRI Hardware Pack H126-F containing the components shown in Table 2.0. Hardware Pack P/N H126-F includes hardware for both Storm P/Ns PWR1600-F and PWR1601-F.

Table 2.0: Connecting Hardware

Header	Mfg. & P/N	H126-F Hardware Pack		
		Qty	Description	Mfg. & Part No.[1]
Amp MATE-N-LOK Connectors for P/N PWR1600-F				
J1	TE/Amp No. 350792-1	1	Housing	TE/Amp No. 350779-1
		4	Terminal (tin)	TE/Amp No. 350550-1
J2	TE/Amp No. 350786-1	1	Housing	TE/Amp No. 350777-1
		2	Terminal (tin)	TE/Amp No. 350550-1
.250" Quick-Fit Spade Connectors for P/N PWR1601-F				
J1	Keystone No. 1287-ST	4	Receptacle (right angle)	AMP No. 3-520133-2
J2		2		
Mounting Hardware		5	PCB Support	Richco No. CBS-4-19
		1	Aluminum Spacer	Richco No. ALSS6-2
		1	Screw	6-32 x 5/8
		1	Nut	6-32

[1] Or equivalent

Output Voltage Setting (J3): Set the shunt at J3 to 12 VDC (factory setting) or 24 VDC output voltage (+/- 10%). If the shunt is removed, the default output voltage is 12 VDC.

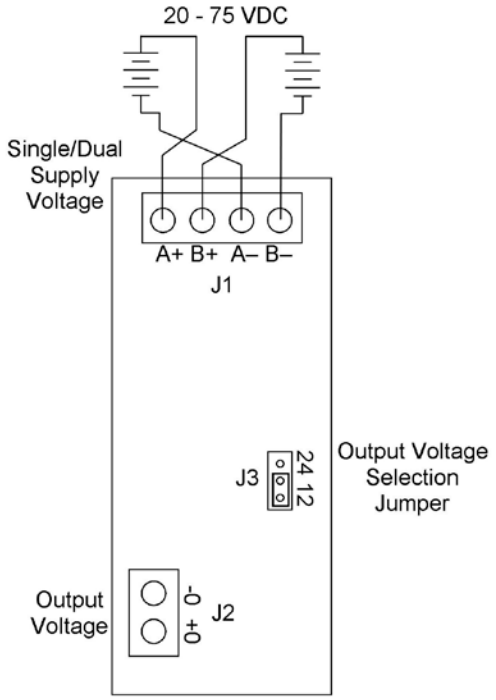

FIGURE 1.0: Connection diagram..

Input Power: Storm can accept one or two power sources in the range of 20 to 75 VDC. If two power supplies are used, they are logically OR'd so that the operating voltage is equal to the higher of the two supplies. Storm can supply up to 16 Amps to the load.

Current Limiting: Storm is configured with a passive current limit, which limits inrush current to < 25A with 48 VDC applied. The regulator is equipped with a soft start circuit to limit start-up currents and current mode limiting to fold back the output for brief over-current conditions. Chart 1.0 shows a typical insertion current with a 48 VDC supply. Storm will provide 16A output at 12 or 24 Volts @75°C.

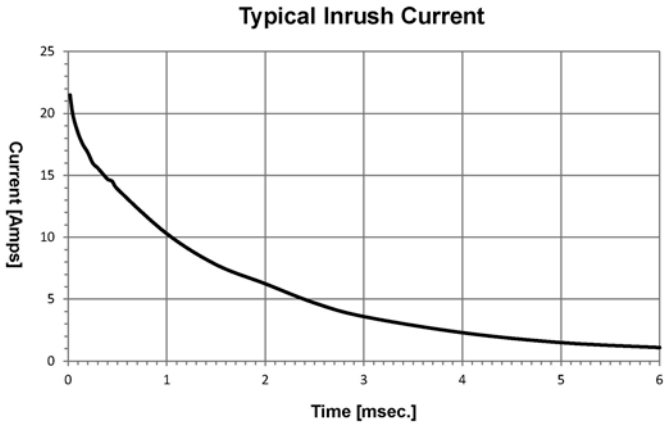

Chart 1.0: Inrush Current with 48VDC Input Applied